Masters Grand Series

7.5HP

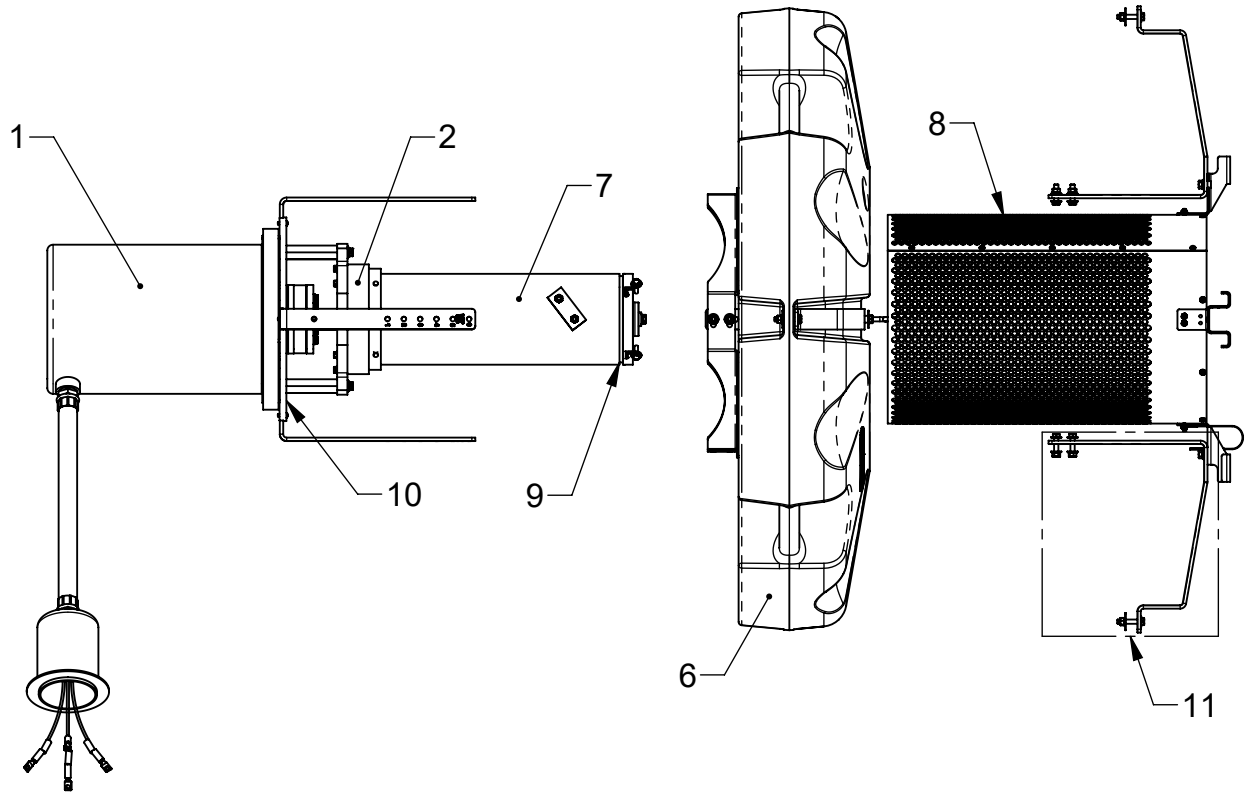

Item	Description			Part Numbers 7.5HP
1	Power Unit - no Chime	1PH	240V	MR760079-316
		3PH	240V	MR760080-316
			460V	MR760085-316
2	Tube Support Assembly			3002313-316
3	Impeller Kit*			760754-316
4	Lakewood Pattern Kit*			3003388
5	Flow Straightener Kit*			3003997
6	Float			3000117
7	Discharge Tube Assembly			3002312-316
8	Intake Screen Kit			3003238
9	Nozzle O-Ring			790499
10	Mounting Plate			3001617
11	Upper Mounting Bracket Kit			3003239
12	Lifting Kit*			3002965-316
13	Stabilizer Kit*			3002966-316

Notes:

**Not Shown*

Aqua Masters
FOUNTAINS AND AERATORS
A DIVISION OF ENQUATICS INC.
16024 COUNTY RD. X, KIEL, WI. 53042

Document: MD002-619
Revision: C, 2023-12-20

SAVED: 2023-12-20 1:32:16 PM